CUSTOMISED SOLUTIONS FOR DEMANDING MATERIAL TEST AND SIMULATION APPLICATIONS

WHAT MOVES YOUR WORLD

MOOG

MOOG AUSTRALIA TEST & SIMULATION CAPABILITIES

MOOG INC

Moog Inc. is a worldwide designer, manufacturer, and integrator of precision motion control products and systems.

Our expertise combined with close customer collaboration is the key to more rapid, reliable and versatile performance testing. From human-rated tests to electric actuation to hexapod configurations, we provide leading-edge technology to meet our customer's needs and enable their creativity

ARC FUNDING - WE UNDERSTAND

The Australian Research Council (ARC) administers the National Competitive Grants Program (NCGP), which supports the highest-quality fundamental and applied research and research training through national competition - http://www.arc.gov.au/grants

Applications for funding is a long process and engaging early maximises your success rate in being awarded with an ARC grant.

- Last minute requests for ROM prices increases the risk of a response that compromises your business case in the University pre-submission review and selection process (Notice of intent, expression of interest etc.)
- Early engagement allows for a considered response supported by preliminary cost/performance trade studies and realistic project delivery timeframes.

Use our expertise to support your business case development

- Leverage Moog background and experience in the execution of similar projects
- Provide a reality check via performance estimation
- Creative innovation and differentiated capability for your faculty as opposed to "me too" systems from a catalogue
- Solutions based on Moog's standard building blocks and customised products in conjunction with a strong collaboration with other companies and subject matter experts ensures a total solution perspective. Creativity and innovation is still encorporated using building blocks which ensures best value for money.

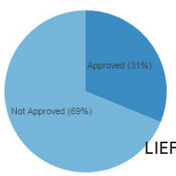

Australian Government
Australian Research Council

LIEF 2016 Round 1 Success Rate

A CUSTOMISED APPROACH TO TEST SOLUTIONS

Moog offers a customised approach to test systems, maximising value for University test labs through appropriate performance estimation, cost/performance trade studies and solution design.

1. **Analyse test requirements**
   a. Static, Quasi-static or dynamic testing
   b. Force, displacement and test frequency or velocity requirements
   c. Load definition
   d. Safety & specimen protection
   e. Refurbishments vs. new solution
   f. Matlab and Simulink or computer-based simulation ensuring performance, pre or post ARC award.

2. **Identify constraints**
   a. Power limit
   b. Footprint or mechanic envelope
   c. Project delivery times
   d. Budget

3. **Develop a solution**
   a. Define scope for Moog and solution partner if required
   b. Performance estimation and trade studies ensuring requirements are achieved within defined constraints
   c. Develop a solution using Moog building blocks, customised and ancillary products for Moog scope of work
   d. Close collaboration with solutions partners, leveraging Moog expertise in the test and simulation industry
   e. Validation of solution through factory testing and on-site commissioning

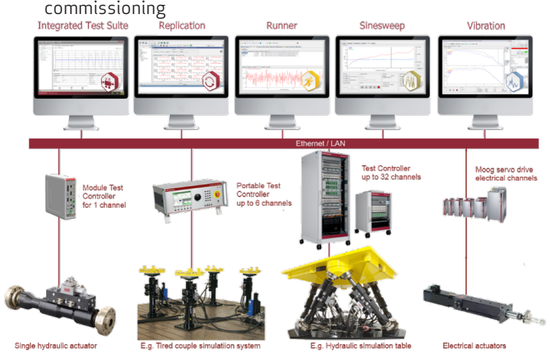

Moog Test Solution Building Blocks

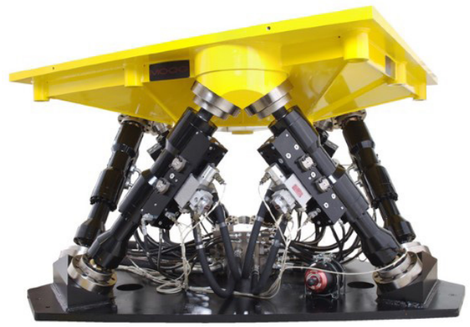

CUSTOMISED PRODUCTS

Customised or bespoke products to fulfil test requirements within project restraints

1. **Servo-hydraulic actuators for Static, Quasi-static or Dynamic testing**

- Stall forces up to 4,500kN at various strokes
- Design pressures up to 700Bar
- Symmetric or Asymmetric design with cushions
- Low friction seals
- Integrated position transducer and load cell
- Mounts: pedestal, clevis, swivel, trunnion, front flange
- Moog servo valve matched to test requirements

2. **Hydraulic Service Manifolds**

- Pressure block and bleed
- Low-High selection with optioned soft transition
- Pulsation damping accumulators
- Control system integration

3. **Hydraulic Power Units**

- Pressure and flow to meet requirements
- Various cooling and filtration designs
- Optional power limitation techniques: soft start, VSD's
- Optional noise limiting designs
- Fully integrated with Moog Test controller for maximum flexibility and safety

Rail Coupling Impact Test

MOOG EXPERTISE USED TO DEVELOP CUSTOMISED TEST SOLUTIONS

1. **Simple Harmonic Motion Analysis**

- Captures performance requirements
- Complete system approach - Actuator Performance Limit
- Load behaviour esimate - Load Line
- Simple and customised Excel

2. **Basic Dynamic Simulation - Simulation X**

- Quick and easy interface
- Number of standard blocks and functions
- Extensive fluid power and controls library
- Reliabile and cost effective

3. **Complex Simulations - Moog Analysis and Simulation Toolbox**

- Based on MATLAB/Simulink
- Extensive library of Moog standard test building blocks
- Dedicated team of highly skilled engineers available to support local teams
- Models and library elements validated by real applications

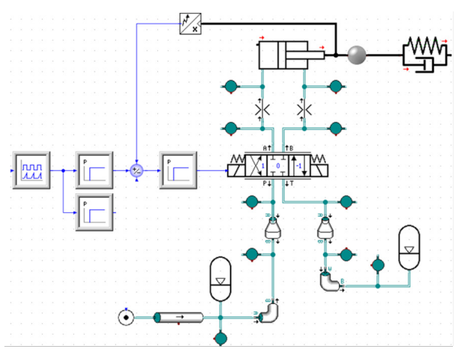

Rail Coupling System Simulation Model

TEST AND SIMULATION

Our approach is to build interchangeability of hardware, software and accessories into our subsystems. This ensures maximum flexibility and ease of use as well as the ability to pass innovations learned across applications to our other customers. From our unique force-loop model, to failsafe measures to protect the test article, to advanced interconnect networks, we are known as the leading-edge control systems supplier in the markets we serve.

Your benefits at a glance:

- Unique force loop model for exacting control and faster testing.
- User-friendly operation for maximum flexibility in your test lab and less set-up time.
- Easily configurable failsafe safety features to protect test articles and maintain testing.
- Expandable to ensure you can upgrade when required.

TEST CONTROLLERS

Expandable Range of Test Controllers giving you maximum flexibility in your test lab and less set-up time

SERIES	MODULAR TEST CONTROLLER	PORTABLE TEST CONTROLLER	AUTOMOTIVE TEST CONTROLLER	AEROSPACE TEST CONTROLLER
				
KEY APPLICATIONS	• Materials and Components	• Aerospace • Automotive (durability and fatigue) • Vibration, shock • Performance Evaluation	• 4-Posters Test Systems • 6-Degree of Freedom (DOF) Test Rig • Durability and fatigue testing • Shock and performance evaluation • Elastomeric testing	• Iron bird • Aircraft/airframe • Spacecraft structural integrity • Landing gear, engine casing, fin actuation loading • Load Calibration
Moog Test Controllers at a Glance	• Supported by Moog Integrated Test Suite Software enabling you to set up and run more tests faster and more efficiently. • Replication, Sinesweep and Vibration modules also available. • Supports both electric, hydraulic and pneumatic test systems			

Advantages

- Force loop model for exacting control and faster testing.
- User-friendly operation - less set-up time.
- Easily configurable failsafe safety features to protect your valuable test articles.
- Expandable with add on features when required.

MOTION SYSTEMS

For a wide range of payload applications

RANGE	MOTION BASES
PAYLOADS	1,000 kg to 16,000 kg
KEY APPLICATIONS	• Noise and vibration testing • Component and subsystem structural performance • Ride quality assessment of seat systems, cockpit modules and entire vehicles • Dynamic functional testing on fuel tanks, antennas, turrets and more
Moog Motion Bases at a Glance	• Electric and Hydraulic tables available • DOF 2 – 8 depending on your requirements • Quick installation and commissioning and smaller footprint • Better replication range, greater customisation • Safer, more reliable performance • Lower energy consumption and lifecycle costs • More user-friendly software

Advantages

- Provides high fidelity and the smallest turn around bump available.
- High reliability with digital control loops that do not drift or deteriorate.
- Easy integration with control loading, vibration tables and G-seats.
- Redundant mechanical and software safety architecture.
- Built in test features recording performance parameters.
- Easy to install, use and maintain.
- Simple support via Moog Simulation Software
- Extensive global support.

HYDRAULIC TEST ACTUATORS

Moog Hydraulic Test Actuators with Hydrostatic or Polymer Bearings to deliver higher reliability, less maintenance and increased dynamic performance for test laboratories looking for a competitive edge.

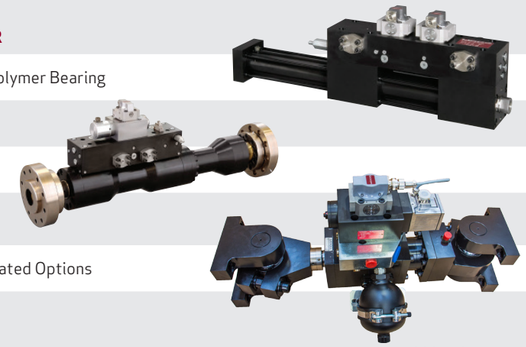

RANGES	TEST ACTUATOR
Type of Bearing	Hydrostatic or Polymer Bearing
Dynamic Force Rating (kN)	Up to 2000
Stroke Length (mm)	Up to 1500
Pressure (bar)	Up to 350
Duty	Static/Fatigue Rated Options
Moog Test Actuators at a Glance	• Innovative 8 pocket hydrostatic bearing increases side load capacity to 60% of stall output and reduces energy requirements, with manifold house • Oil-cooled polymer bearing improves side load capacity to 15% of stall output, compared to 10% with traditional polymer bearing design

Advantages

- Higher level of dynamic performance, reliability, and longevity.
- Advanced coating used on the rod significantly improves seal wear for long life and less maintenance.
- Manifold houses all of piping in the actuator, removing the need for most of the exterior piping.

FULL SCALE FATIGUE TESTING FOR BAE HAWK 127

When the Australian government made the decision to purchase the BAE Hawk Mk 127 Lead-in fighter for the Royal Australian Air Force, The Australian Defence, Science and Technology Organisation (DSTO) was tasked with completing a full-scale fatigue test in conjunction with BAE systems and looked to Moog for a solution. Fatigue testing is a critical requirement for military aircraft to determine the life span of safe, economical service and extend the fleet beyond the specified flying hours.

The Challenge

To create a specialised actuator design capable of achieving critical performance parameters required that are not possible to achieve with standard industrial cylinders. These include low-friction, high duty cycles and structural rigidity. Moog also needed to develop a unique abort manifold for static and dynamic testing that is superior to what was previously available.

The Solution

Hydraulics were used to apply the simulated flight loads across the complete airframe and pneumatics to pressurise the cockpit and fuel tanks. Moog Australia designed and manufactured 84 hydraulic actuators that were used in load or displacement control and 95 controlled abort manifolds to manage the controlled abort of the test should a fault condition occur.

The Result

Key features of the servo actuators

- Realistic and repeatable test processes
- An extensive database of measured values for a variety of solutions
- Customised sealing and bearing solutions including elastomer seals, laminar and hydrostatic.

Key features of the abort manifold

- Modular construction for 'active' [closed-loop] abort or conventional 'passive' fixed orifice abort.
- Optimised transition from normal control to abort to minimise structural disturbances.
- Developed under aircraft standard Failure Mode, Effects and Criticality Analysis for optimal reliability.
- Extensive static and dynamic performance testing.

Aircraft test systems demonstrate Moog capabilities for improving motion control and safety for material test applications. The requirements for high performance servo-actuators, controlled abort and digital system control are also common for a variety of applications ranging from flight simulators to turbine controls to high speed injection moulding machines. Moog is now a system supplier for these applications.

TEST AND SIMULATION

INSTRON 2 AXES MACHINE UPGRADE AT UNIVERSITY OF SYDNEY

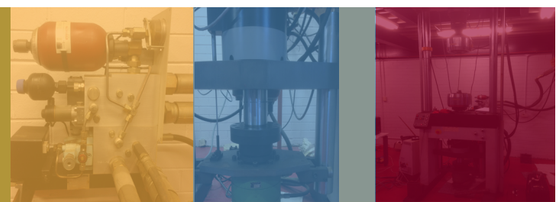

When Sydney University required an upgrade of a unique 2 axes machine to test specimens for research, they looked to Moog Australia for a solution.

The Challenge

To cycle the specimen in closed loop position/force/strain in both the axial and torsional axes up to 10Hz. Moog Australia had never upgraded a machine like this before including closed loop strain control. The existing Instron electronics were faulty and had to be replaced. Moog Australia were asked to supply a new two axes strain transducer to interface with our Portable Test Controller (PTC) and Moog Integrated Test Suite (MITS) to expand the control to include strain.

The Solution

Moog Australia performed a system audit to determine what was required for the upgrade. After the audit it was identified the following was required:

(a) Dual channel PTC, MITS, cables and dual channel strain transducer
(b) Overhaul of Servovalves (2 off).
(c) Replacement of filter element.
(d) Check, repair and recharge of existing accumulators.
(e) Removal of existing pendant controls for the jog function.
(f) Rewiring of existing clamp controls.
(g) Supply of PTC Pendant with 4m cable assembly for jog function.
(h) Site installation, commissioning and training
(i) System flushing.

By reviewing the machine requirements in a holistic sense, customer requirements and system reliability, we were able to implement a solution that optimised the outcome and enhanced performance. This is a unique machine in Australia with the torsional axis control via RVDT (position), Torque transducer (torque) and Torsional strain. Moog Australia also provided training to ensure that the customer would be self-sufficient.

The Result

Sydney University is using the machine for research and are impressed with the closed loop bandwidth of 10Hz that was achieved with optimised tuning. They have also commented on how easy the system is to use. This is the second upgrade Moog Australia has done with University of Sydney and hopefully many more to come. Sydney University use Moog Australia because we are in close proximity for sales/service support and understand test machine upgrade requirements.

TESTING LOADS ON REINFORCED CONCRETE SLABS AT CURTIN UNIVERSITY

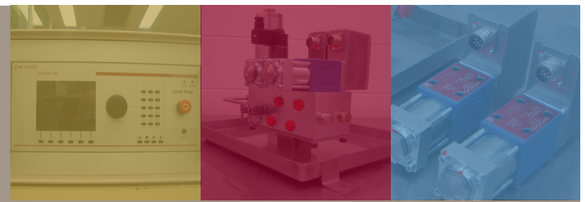

When Curtin University Western Australia were considering options for a new 'Reinforced concrete slab' load test system, they approached Moog Australia for a flexible solution to utilise and optimise existing hardware.

The Challenge

To supply a highly flexible reconfigurable test system capable of static and cyclic tests for a variation of beams from 110mm thick concrete slabs to 900mm deep pre-tressed members. To achieve this the project required utilising a wide selection of existing 700bar rated double acting hydraulic cylinders (10 tonne to 500 tonne) and feedback sensors and the inclusion of 2 axes of closed loop servo hydraulic control, while maintaining the option of adding extra axes in the future.

The Solution

Moog supplied and commissioned a system based on the Moog Portable Test Controller (PTC) and a 2 axis hydraulic service manifold. Moog Australia delivered hands on training during system commissioning so that Curtin University were confident in its operation before leaving site and site acceptance was signed off by both parties.

The Result

Key features of the Moog Portable Test Controller (PTC):

- 4 axis stand alone desktop controller with LCD display
- Designed to provide high performance closed loop control (position/force) of dynamic and static tests
- User-friendly interface that allows configuration of axes for independent or master/slave control and to run tests.
- Can be networked with other Moog controllers to extend axes count

Key features of the two axis Hydraulic Service Manifold (HSM):

- Allowed for mounting and isolation of desired servo valves for each axis
- Filtration to ensure longevity of the system

The capability to coordinate multiple axes allows researchers to implement classic beam analysis with two different loads at different points on the beam, or two deflections of a non uniform beam by measuring force to determine stiffness at the two points.

CENTRAL QUEENSLAND UNIVERSITY - 4.5MN TEST SYSTEM FOR TRAIN COMPONENT RESEARCH

When Central Queensland University Centre for Railway Engineering (CRE) required a large capacity hydraulic servo test system to be used to validate design standards for train couplings, they looked to Moog Australia for assistance in the design and supply a high performance solution.

The Challenge

The challenge was to provide a hydraulic system which could meet a peak flow demand of 7700 lpm (specimen test profile – sinusoidal 10Hz ± 2mm) that utilised the existing hydraulic system at CRE which was limited to 550 lpm and 350 bar. The challenge needed to address the control (supply state implementation), accumulator supply/discharge and supply and return line state conditions in order to ensure cavitation did not occur.

The Solution

Moog provided a servo controlled hydraulic system which included a high capacity discharge accumulator bank, a custom designed return line pneumatic plenum vessel and a fatigue rated 4.5MN servo actuator. The servo actuator include an integral position, pressure feedback sensors, system manifold and a high performance Moog 3 stage servo proportional valve.

The control system was modelled using Simulation X to validate the hardware selection, correct sizing of the accumulator capacity, hydraulic line sizing and return line cavitation mitigation in order to meet the 4 cyclic sinusoidal testing conditions – 0.25 Hz ± 2MN/±75mm, 2 Hz ± 2MN/±75mm, 10 Hz ± 1MN/±20mm and 2 Hz ± 3.1MN/±9mm.

The control platform was a Moog STX series industrial controller. The STX assembly featured 4 x 2.5kHz digital servo controllers plus 8/8 DIO expansion card to interface into the safety and control management system of the test. The tests were managed via a Moog SDK SW interface to the CQU host controller test management software.

The Result

After calibration of the system and optimisation of the control model the system has run in excess of 1 million cycles. The test parameters and control concept enables a laboratory rig to reliable emulate realistic heavy haul train conditions.

The test hardware setup provides CQU with the capability to test and better qualify new designs of rail couplings. The qualification of the test regime enables the rail coupling to be tested under a full load spectrum within a laboratory environment providing significant savings in the development time of new coupling designs when compared to the previous drop hammer and iterative in field methodology previously used.

NATIONAL MEASUREMENT INSTITUTE - GEC AVERY LOAD CELL TESTING MACHINE UPGRADE

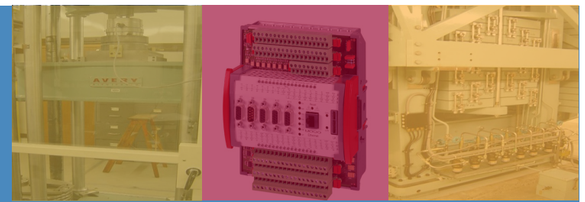

When the National Measurement Institute (NMI) required an upgrade of the only GEC Avery Load Cell Testing Machine in Australia they looked to Moog Australia for a solution.

The Challenge

To upgrade a GEC Avery Load Cell Calibration Machine which would allow test and calibration of load cells accurately in compression or tension up to 550kN by putting actual weights onto four stacks. These stacks were controlled in servo hydraulic closed loop position control via a look up table. Moog Australia had never upgraded a machine like this before as the requirements and machine were unique and not well documented. The existing hydraulics and electronics were old, and unreliable.

The Solution

Moog Australia replaced the system with a 4 axes Moog Servo Controller (MSC) control system including a high level operator interface screen for conducting the load cell calibration. The solution was able to interface with existing valves and transducers, had additional capacity to drive other axis, could perform extensive diagnostics and provided a high performance closed loop control for 4 axes (2ms) with complex sequencing. Moog Australia also provided training to ensure the NMI would be self-sufficient.

The Result

Key features of the Moog Servo Controller (MSC)

- Freely programmable multi-axis controller
- MACS (Moog Axis Control Software)
- Suitable for electric and hydraulic axes
- Integrated PLC functionality
- Flexible control structure
- Analog and Canbus communications
- Designed for high speed loop closure times of <1ms

Moog can provide a customised high performance solution with state of the art digital motion control products and technology that are locally supported by an experienced team. Flexible structure within the Digital Controller allows the implementation of 'intelligent' control - including but not limited to look up table (LUT) algorithms reading CSV load file, complex sequencing, interlocks and universal interface. Moog's digital motion control solutions allows you to modernise old platforms adding new life and versatility to old platforms.

TAKE A CLOSER LOOK.

For more information visit our website or contact us below:

MOOG AUSTRALIA

18 Corporate Drive
Heatherton VIC 3202
Australia
Tel: +61 (0) 3 9561 6044
info.australia@moog.com

www.moog.com.au

The technical data is based on current available information and is subject to change at anytime by Moog. Specifications for specific systems or applications may vary